GREENHECK
Building Value in Air.

TMS JOHNSON
MANUFACTURERS REPRESENTATIVE

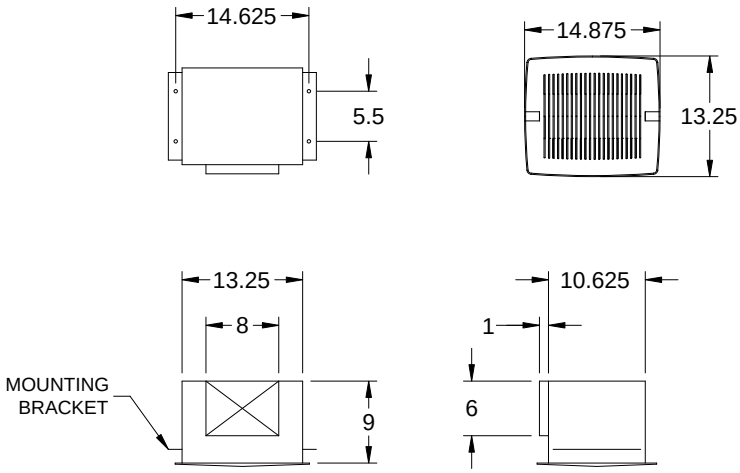

Model: SP-A190

Ceiling Exhaust Fan

Standard Construction Features:

- Corrosion resistant galvanized steel scroll and housing - Sound absorbing insulation - White designer non-yellowing grille - Outlet duct collar with integral spring loaded backdraft damper - Double inlet forward curved wheel - Plug type disconnect - Adjustable mounting brackets - Field rotatable discharge

Stock Notes

- Units are stocked with 115/60/1 motors
- Plug-in disconnect switch included
- Integral backdraft damper
- All SP fans require 5W Speed Controller

Available Accessories

- Speed controls
- Wall and discharge accessories

Dimensional	
Quantity	1
Weight w/o Acc's (lb)	17
Weight w/ Acc's (lb)	17

Motor	
Motor Mounted	Yes
** Input Watts (W)	53
Voltage/Cycle/Phase	115/60/1
Enclosure	ODP

Model	ENERGY STAR®	HVI	Continuous Ventilation Compatible	Control Voltage	RPM	Amps*	Max. Input Watts*		CFM / Static Pressure in Inches wg										
									0	0.1	0.125	0.25	0.375	0.5	0.625	0.75	0.875	1.0	1.25
SP-A190	☆				1400	0.45	54.2	CFM	229	214	210	186	156						
								Sones	2.5	2.0	2.0	2.0	1.5						
								CFM/Watt*	4.23	4.08	4.05	3.78	3.36						
								Watts*	54.2	52.5	51.9	49.2	46.4						